Kiepe Industry
a .steute brand

.steute

Ex emergency pull-wire switch
Ex ZS 80 AL-3D

Product features

- Ex zone 22
- Metal enclosure
- 2 contacts
- Position indicator and integrated emergency-stop push button
- Wire length up to 100 m
- Spring force variant: 100 N
- Lever for release and position indication
- Watertight collar
- Wire pull and breakage detection

Dimensions

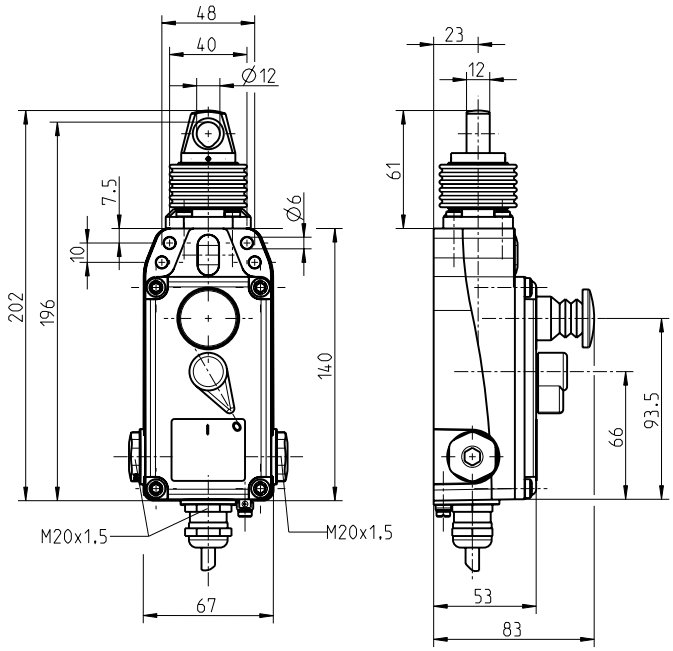

Technical data

Applied standards
EN IEC 60079-0, EN 60079-31, EN 60947-5-1, EN 60947-5-5, EN ISO 13849-1, EN ISO 13850

Enclosure
aluminium die-cast, powder-coated, RAL 1003

Cover
aluminium die-cast, powder-coated, RAL 9005

Degree of protection
IP65 (EN IEC 60079-0 + IEC/EN 60529), IP67 (IEC/EN 60529)

B_{10d} (10 % load)
200 000

T_M
max. 20 years

Contact material
silver

Switching system
slow action, positive break NC contacts ⊖

Switching elements
1 NC/1 NO contact or 2 NC contacts, type Zb

Connection
cable H05VV-F

Cable cross-section
4 x 0.75 mm² (incl. conductor ferrules)

Cable length
3 m

Rated impulse withstand voltage U_{imp}
4 kV

Rated insulation voltage U_i
250 V

Conventional thermal current I_{the}
6 A

Utilisation category
AC-15

Rated operating current/voltage I_e/U_e
6 A/250 VAC, 0.25 A/230 VDC

Short-circuit protection
6 A gG/gN fuse

Ambient temperature
–20 °C ⋯ +65 °C

Mechanical life
> 100 000 operations

Max. wire length
100 m

Note
At 5 m distance intermediate wire supports are required. One wire thimble is provided.

Errors and omissions excepted.

steute Technologies GmbH & Co. KG
kiepe.industry@steute.com
Brückenstraße 91
32584 Löhne, Germany
+49 5731 745-0
www.kiepe-industry.com

Ex emergency pull-wire switch
Ex ZS 80 AL-3D

Technical data (contd.)

Impact energy
max. 7 J

Ex marking
II 3D Ex tc IIIC T80°C Dc

Switching diagram – Ex ZS 80 AL-3D 1Ö/1S

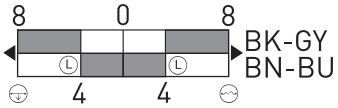

Latching point
Wire breakage detection
Wire pull detection

Switching diagram – Ex ZS 80 AL-3D 2Ö

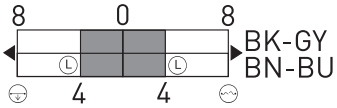

Latching point
Wire breakage detection
Wire pull detection