Kiepe Industry
a .steute brand

.steute

Ex emergency pull-wire switch
Ex ZS 80 AL

Product features

- Ex zone 1 and 21
- Metal enclosure
- 2 contacts
- Position indicator and integrated emergency-stop push button
- Wire length up to 100 m
- Spring force variant: 100 N
- Lever for release and position indication
- Watertight collar
- Wire pull and breakage detection

Dimensions

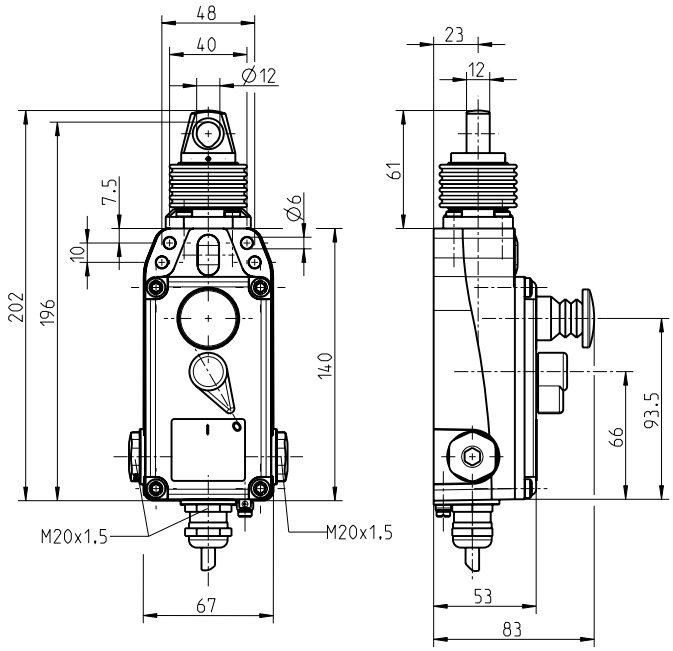

Technical data

Applied standards
EN 60947-5-1, EN 60947-5-5, EN IEC 60079-0, EN 60079-1, EN 60079-31, EN ISO 13850, EN ISO 13849-1

Enclosure
aluminium die-cast, powder-coated, RAL 1003

Cover
aluminium die-cast, powder-coated, RAL 9005

Degree of protection
IP65 (EN IEC 60079-0 + IEC/EN 60529), IP67 (IEC/EN 60529)

B_{10d} (10 % load)
200 000

T_M
max. 20 years

Switch insert
1 x Ex 14

Contact material
silver

Switching system
slow action, positive break NC contacts ⊖

Switching elements
1 NC/1 NO contact or 2 NC contacts, type Zb

Connection
cable H05VV-F

Cable cross-section
4 x 0.75 mm² (incl. conductor ferrules)

Cable length
3 m

Rated impulse withstand voltage U_{imp}
4 kV

Rated insulation voltage U_i
250 V

Conventional thermal current I_{the}
T6: 6 A, T5: 3 A

Utilisation category
AC-15; DC-13

Rated operating current/voltage I_e/U_e
6 A/250 VAC, 0.25 A/230 VDC

Short-circuit protection
6 A gG/gN fuse

Ambient temperature
T6: –20 °C ⋯ +65 °C,
T5: –20 °C ⋯ +75 °C, +90 °C with max. 3 A

Mechanical life
> 100 000 operations

Max. wire length
100 m

Errors and omissions excepted.

steute Technologies GmbH & Co. KG
kiepe.industry@steute.com
Brückenstraße 91
32584 Löhne, Germany
+49 5731 745-0
www.kiepe-industry.com

Ex emergency pull-wire switch
Ex ZS 80 AL

Technical data (contd.)

Note
At 5 m distance intermediate wire supports are required. One wire thimble is provided.

Impact energy
max. 7 J

Ex marking
II 2G Ex d IIC T6/T5 Gb,
II 2D Ex tb IIIC T80 °C/T95 °C Db
IECEx Ex d IIC T6/T5 Gb,
Ex tb IIIC T80 °C/T95 °C Db

Approvals
PTB 11 ATEX 1003 X
IECEx PTB 07.0034 X

Switching diagram – Ex ZS 80 AL 1Ö/1S

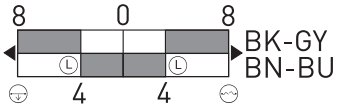

Latching point
Wire breakage detection
Wire pull detection

Switching diagram – Ex ZS 80 AL 2Ö

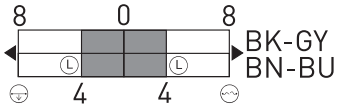

Latching point
Wire breakage detection
Wire pull detection