Kiepe Industry
a .steute brand

.steute

Emergency pull-wire switch
ZS 80 AL Twin System

Product features

- Metal enclosure
- Metal cover
- 4 contacts
- Position indicator
- Wire length up to 100 m
- Spring force variant: 100 N
- Lever for release and position indication
- Watertight collar
- Wire pull and breakage detection
- Mounting bracket: galvanized sheet steel

Dimensions

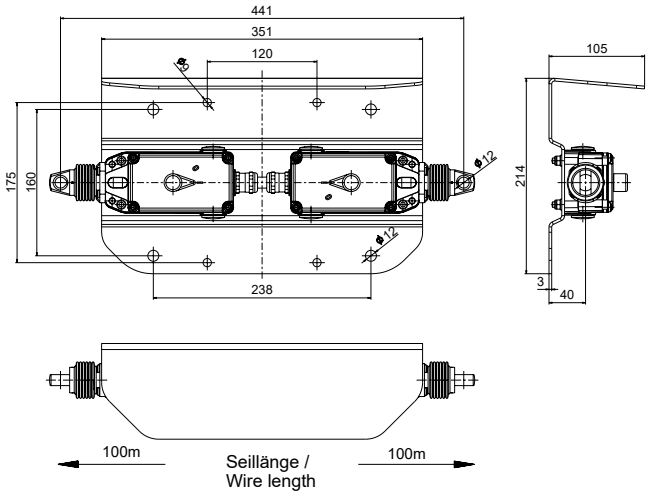

General technical data

Applied standards
EN 60947-5-1, EN 60947-5-5, EN ISO 13850, EN ISO 13849-1

Enclosure
aluminium die-cast, powder-coated, RAL 1003

Cover
aluminium die-cast, powder-coated, RAL 9005

Tightening torque
cover screws: 2.4 Nm

Degree of protection
IP67 (IEC/EN 60529)

Contact material
silver

Switching elements
2 NC/2 NO contacts, type Zb

Switching system
slow action, positive break NC contacts ⊖

Mechanical life
> 100 000 operations

Max. wire length
100 m

Connection
2 x 4 pole terminal block

Cable entry
3 x M20 x 1.5 (for cable glands only)

Cable cross-section
max. 2.5 mm^2 (incl. conductor ferrules)

Rated impulse withstand voltage U_{imp}
2.5 kV

Rated insulation voltage U_i
250 V

Conventional thermal current I_{the}
2 A

Utilisation category
AC-15; DC-13

Rated operating current/voltage I_e/U_e
2 A/250 VAC; 0.25 A/230 VDC; 2 A/24 VDC

Short-circuit protection
2 A gG fuse

Ambient temperature
–25 °C ⋯ +70 °C

Note
At 5 m distance intermediate wire supports are required. One wire thimble is provided.
The two ZS 80 2Ö/2S WVD are connected via a connecting pipe with an outer diameter of 12mm and an inner diameter of 9,5mm between the two rear cable entries.

Errors and omissions excepted.

steute Technologies GmbH & Co. KG
kiepe.industry@steute.com
Brückenstraße 91
32584 Löhne, Germany
+49 5731 745-0
www.kiepe-industry.com

Emergency pull-wire switch
ZS 80 AL Twin System

Safety-relevant data

B_{10d} (10 % load)
200 000

T_M
max. 20 years

EN ISO 13849-1
up to Category 4 with Safety Relay
up to PLe depending upon system architecture

IEC 62061
up to SIL3 depending upon system architecture

Annual Usage
1 cycle per hour / 24 hours per day / 365 days MTTFd 228 years

Contact diagram / ZS 80

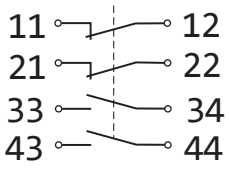

Switching diagram / ZS 80

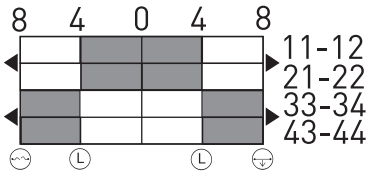

Ⓛ Latching point
Wire breakage detection
Wire pull detection

Wiring diagram

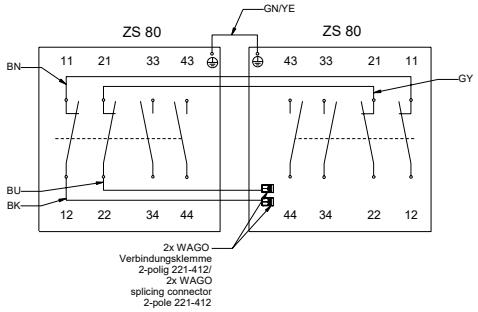

Errors and omissions excepted.